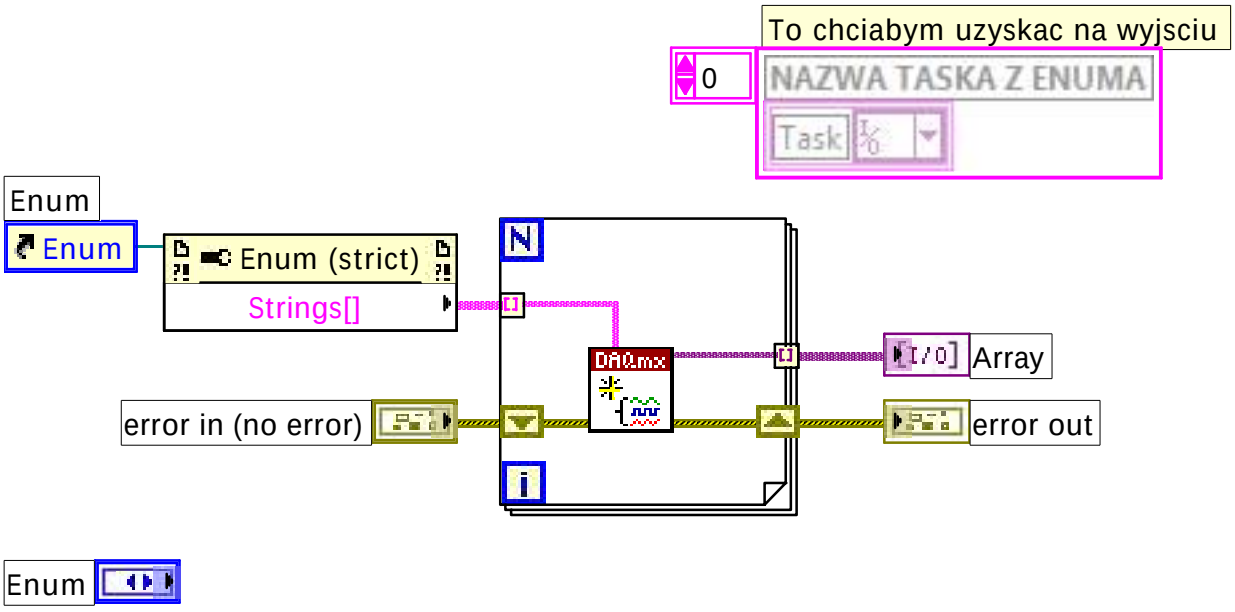Create Multiple Tasks.vi
E:\Programowanie\Labview projects\Hardware\Create Task\Create Multiple Tasks.vi
Last modified on 3/12/2018 at 7:34 PM
Printed on 3/12/2018 at 7:47 PM